NOTA:
El Lpi y Lpd se acotan hasta el eje del pozo

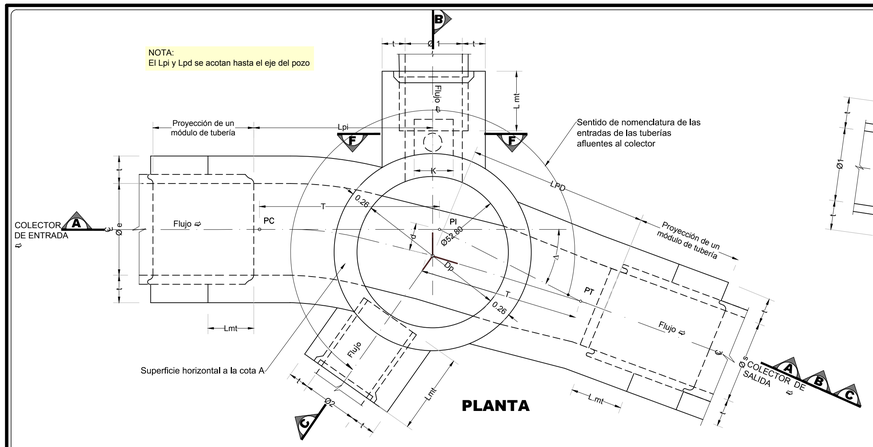


## PLANTA

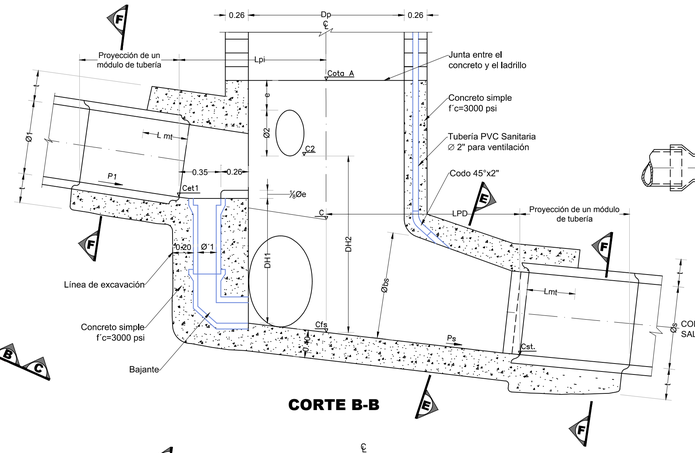


## CORTE B-B

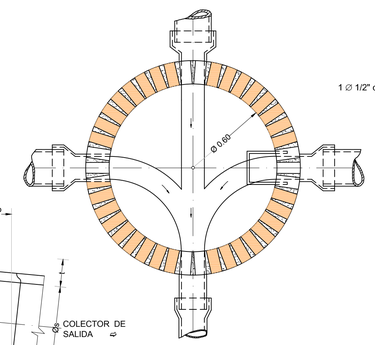


## CONFLUENCIA DE COLECTORES DETALLE DE LA CAÑUELA

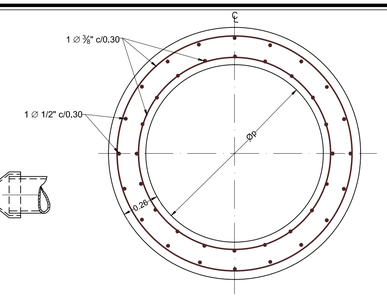


## CILINDRO DEL POZO
(Ver notas 10 y 11)

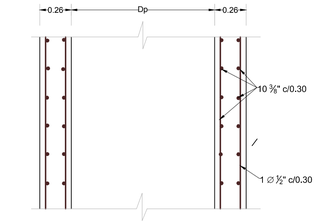


## SECCION LONGITUDINAL

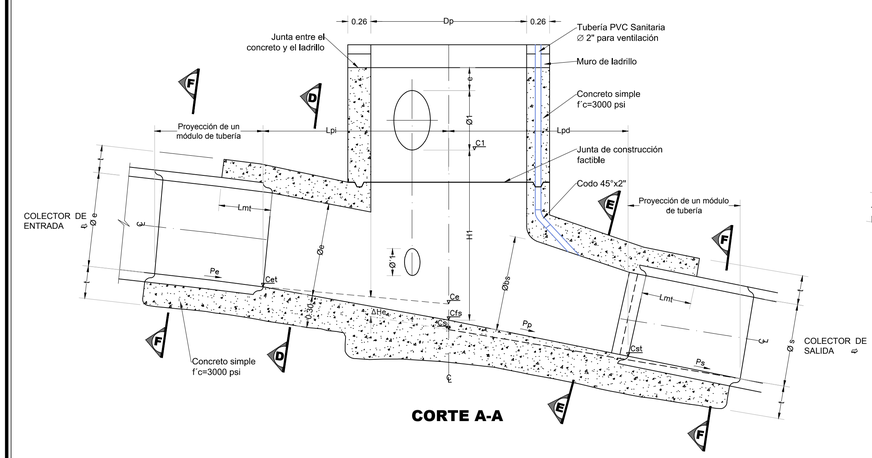


## CORTE A-A

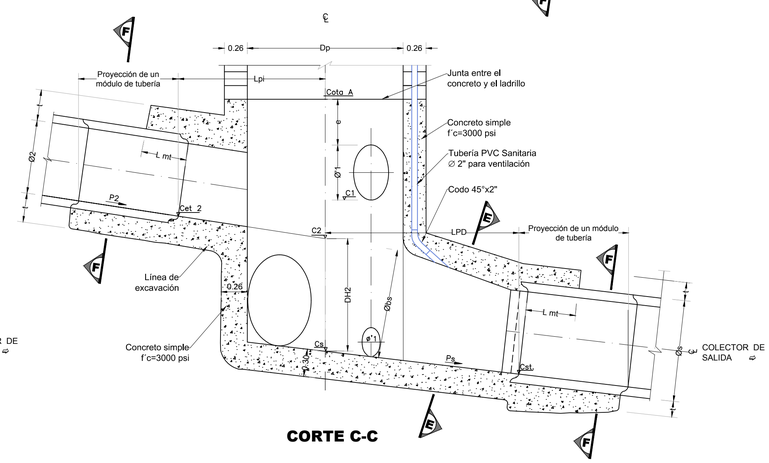


## CORTE C-C

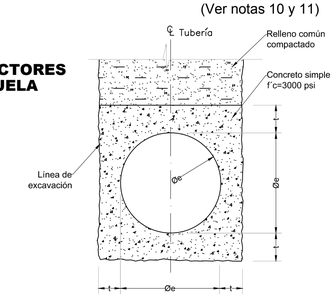


## CORTE D-D

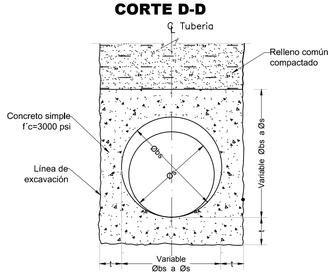


## CORTE E-E

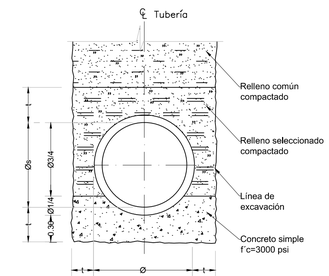


## CORTE F-F
Cimentacion para el primer modulo en tuberias de concreto reforzado

| CAMARA DE CAIDA | | | |
|---|---|---|---|
| Øe | K | Ø'1 | e |
| 8" | 0.60 | 8" | 0.20 |
| 10" | 0.60 | | |
| 12" | 0.60 | | |
| 14" | 0.70 | 12" | 0.25 |
| 16" | 0.70 | | |
| 18" | 0.70 | | |
| 21" | 0.76 | 14" | 0.30 |
| 24" | 0.76 | | |
| 27" | 0.81 | 16" | |
| 30" | 0.81 | | |
| 33" | 0.81 | | |
| 36" | 0.81 | | |
| 1.00m | 0.86 | 18" | 0.35 |
| 1.10m | 0.86 | | |
| 1.20m | 0.86 | | |
| 1.30m | 0.86 | | |

## A L C A N T A R I L L A D O  S A N I T A R I O  I N T E R C E P T O R

C U A D R O  D E  D I M E N S I O N E S

| ESTRUCTURA POZO | ABSCISA | LOCALIZACION DEFLEX | TANGENT T(m) | R m | d m | Dp m | COLECTOR DE ENTRADA 0e m | Pe % | Lpi m | Ce m | Cet m | COLECTOR DE SALIDA 0s m | 0bs m | Ps % | Pp % | Lpd m | Cs m | Cfs m | Cst m |
|---|---|---|---|---|---|---|---|---|---|---|---|---|---|---|---|---|---|---|---|
| P(MV)R1 | | | | | | 1.20 | | | | | | 0.37 | | 1.00 | | 0.60 | 1036.13 | | 1036.13 |
| P(MV)R2 | | | | | | 1.20 | 0.37 | 1.00 | 0.60 | 1035.16 | 1035.16 | 0.37 | | 1.00 | | 0.60 | 1035.16 | | 1035.16 |
| P(MV)R3 | | | | | | 1.20 | 0.37 | 1.00 | 0.60 | 1034.53 | 1034.54 | 0.37 | | 1.00 | | 0.60 | 1034.53 | | 1034.53 |
| P(MV)R4 | | | | | | 1.20 | 0.37 | 1.00 | 0.60 | 1033.91 | 1033.91 | 0.37 | | 1.50 | | 0.60 | 1033.91 | | 1033.90 |
| P(MV)R5 | | | | | | 1.20 | 0.37 | 1.50 | 0.60 | 1032.56 | 1032.57 | 0.37 | | 3.70 | | 0.60 | 1032.56 | | 1032.54 |
| P(MV)R6 | | | | | | 1.20 | 0.37 | 3.70 | 0.60 | 1029.25 | 1029.28 | 0.37 | | 2.50 | 3.50 | 0.60 | 1029.25 | 1029.25 | 1029.23 |
| P(MV)R7 | | | | | | 1.20 | 0.37 | 2.50 | 0.60 | 1027.31 | 1027.33 | 0.37 | | 3.10 | 3.22 | 0.60 | 1027.31 | 1027.31 | 1027.29 |
| P(MV)R8 | | | | | | 1.20 | 0.37 | 3.10 | 0.60 | 1025.92 | 1025.94 | 0.37 | | 1.00 | 1.54 | 0.60 | 1025.92 | 1025.93 | 1025.92 |
| P(MV)R9 | | | | | | 1.20 | 0.37 | 1.00 | 0.60 | 1025.09 | 1025.10 | 0.37 | | 2.60 | | 0.60 | 1025.09 | | 1025.08 |
| P(MV)R10 | | | | | | 1.20 | 0.37 | 2.60 | 0.60 | 1023.46 | 1023.48 | 0.45 | | 1.50 | 2.15 | 0.60 | 1023.46 | 1023.46 | 1023.45 |
| P(MV)R11 | | | | | | 1.20 | 0.45 | 1.50 | 0.60 | 1022.31 | 1022.32 | 0.45 | | 1.00 | 1.58 | 0.60 | 1022.31 | 1022.31 | 1022.31 |
| P(MV)R12 | | | | | | 1.20 | 0.45 | 1.00 | 0.60 | 1022.12 | 1022.13 | 0.45 | | 1.00 | 1.33 | 0.60 | 1022.12 | 1022.12 | 1022.11 |
| P(MV)R13 | | | | | | 1.20 | 0.45 | 1.00 | 0.60 | 1021.97 | 1021.97 | 0.45 | | 1.00 | | 0.60 | 1021.97 | | 1021.97 |
| P(MV)R14 | | | | | | 1.20 | 0.45 | 1.00 | 0.60 | 1021.59 | 1021.60 | 0.45 | | 1.00 | 1.33 | 0.60 | 1021.59 | 1021.59 | 1021.58 |
| P(MV)R15 | | | | | | 1.20 | 0.45 | 1.00 | 0.60 | 1021.37 | 1021.38 | 0.45 | | 2.50 | | 0.60 | 1021.37 | | 1021.36 |
| P(MV)R16 | | | | | | 1.20 | 0.45 | 2.50 | 0.60 | 1019.18 | 1019.20 | 0.45 | | 4.00 | | 0.60 | 1019.18 | | 1019.16 |
| P(MV)R17 | | | | | | 1.20 | 0.45 | 4.00 | 0.60 | 1017.29 | 1017.31 | 0.45 | | 3.50 | 3.71 | 0.60 | 1017.29 | 1017.29 | 1017.27 |
| P(MV)R18 | | | | | | 1.20 | 0.45 | 3.50 | 0.60 | 1015.48 | 1015.50 | 0.45 | | 4.00 | | 0.60 | 1015.48 | | 1015.46 |
| P(MV)R19 | | | | | | 1.20 | 0.45 | 4.00 | 0.60 | 1013.26 | 1013.29 | 0.45 | | 4.00 | 4.40 | 0.60 | 1013.26 | 1013.26 | 1013.23 |
| P(MV)R20 | | | | | | 1.20 | 0.45 | 4.00 | 0.60 | 1011.32 | 1011.34 | 0.45 | | 2.50 | 3.28 | 0.60 | 1011.32 | 1011.32 | 1011.30 |
| P(MV)R21 | | | | | | 1.20 | 0.45 | 2.50 | 0.60 | 1009.06 | 1009.07 | 0.45 | | 3.00 | | 0.60 | 1009.06 | | 1009.04 |
| P(MV)R22 | | | | | | 1.20 | 0.45 | 3.00 | 0.60 | 1006.58 | 1006.60 | 0.45 | | 3.50 | 3.79 | 0.60 | 1006.58 | 1006.58 | 1006.56 |
| P(MV)R23 | | | | | | 1.20 | 0.45 | 3.50 | 0.60 | 1005.52 | 1005.54 | 0.45 | | 3.50 | 3.60 | 0.60 | 1005.52 | 1005.52 | 1005.50 |
| P(MV)R24 | | | | | | 1.20 | 0.45 | 3.50 | 0.60 | 1003.17 | 1003.19 | 0.45 | | 2.80 | 3.55 | 0.60 | 1003.17 | 1003.17 | 1003.15 |
| P(MV)R25 | | | | | | 1.20 | 0.45 | 2.80 | 0.60 | 1000.51 | 1000.52 | 0.45 | | 3.60 | | 0.60 | 1000.51 | | 1000.49 |
| P(MV)R26 | | | | | | 1.20 | 0.45 | 3.60 | 0.60 | 998.68 | 998.70 | 0.45 | | 3.60 | 4.12 | 0.60 | 998.68 | 998.68 | 998.66 |
| P(MV)R27 | | | | | | 1.20 | 0.45 | 3.60 | 0.60 | 997.77 | 997.79 | 0.45 | | 3.60 | | 0.60 | 997.77 | | 997.75 |
| P(MV)R28 | | | | | | 1.20 | 0.45 | 3.60 | 0.60 | 996.35 | 996.37 | 0.45 | | 4.10 | | 0.60 | 996.35 | | 996.32 |
| P(MV)R29 | | | | | | 1.20 | 0.45 | 4.10 | 0.60 | 994.93 | 994.95 | 0.45 | | 2.00 | 3.06 | 0.60 | 994.93 | 994.94 | 994.92 |
| P(MV)R30 | | | | | | 1.20 | 0.45 | 2.00 | 0.60 | 994.49 | 994.50 | 0.45 | | 4.50 | | 0.60 | 994.49 | | 994.46 |
| P(MV)R42 | | | | | | 1.20 | 0.45 | 4.50 | 0.60 | 993.33 | 993.35 | 0.45 | | 6.50 | | 0.60 | 993.33 | | 993.30 |
| P(MV)R32 | | | | | | 1.20 | 0.45 | 6.50 | 0.60 | 992.02 | 992.06 | 0.45 | | 2.00 | 3.86 | 0.60 | 992.02 | 992.03 | 992.01 |
| P(MV)R33 | | | | | | 1.20 | 0.45 | 2.00 | 0.60 | 991.45 | 991.47 | 0.45 | | 11.00 | | 0.60 | 991.45 | | 991.39 |
| P(MV)R34 | | | | | | 1.20 | 0.45 | 11.00 | 0.60 | 989.69 | 989.75 | 0.55 | | 0.90 | 5.75 | 0.60 | 989.69 | 989.72 | 989.69 |
| P(MV)R35 | | | | | | 1.20 | 0.55 | 0.90 | 0.60 | 989.53 | 989.54 | 0.55 | | 0.90 | 1.53 | 0.60 | 989.53 | 989.53 | 989.52 |
| P(MV)R36 | | | | | | 1.20 | 0.55 | 0.90 | 0.60 | 989.30 | 989.30 | 0.55 | | 0.90 | | 0.60 | 989.30 | | 989.29 |
| P(MV)R37 | | | | | | 1.20 | 0.55 | 0.90 | 0.60 | 989.07 | 989.07 | 0.55 | | 0.90 | | 0.60 | 989.07 | | 989.06 |

| ESTRUCTURA POZO | COLECTORES AFLUENTES 01 m | 02 m | 03 m | 04 m | C1 m | C2 m | C3 m | C4 m | CAMARAS DE CAIDA dHe m | 0'e m | dH1 m | 0'1 m | dH2 m | 0'2 m | dH3 m | 0'3 m | dH4 m | 0'4 m | e m | Cota A m | CANTIDADES DE OBRA ACERO Kg | CONCRETO m3 | EXCAV. m3 | TUBERIA PVC 02" m |
|---|---|---|---|---|---|---|---|---|---|---|---|---|---|---|---|---|---|---|---|---|---|---|---|---|
| P(MV)R1 | | | | | | | | | | | | | | | | | | | 0.20 | 1036.74 | 0.00 | 1.24 | 7.04 | |
| P(MV)R2 | | | | | | | | | | | | | | | | | | | 0.25 | 1035.78 | 0.00 | 1.35 | 10.78 | |
| P(MV)R3 | | | | | | | | | | | | | | | | | | | 0.25 | 1035.16 | 0.00 | 1.35 | 9.84 | |
| P(MV)R4 | | | | | | | | | | | | | | | | | | | 0.25 | 1034.53 | 0.00 | 1.35 | 5.07 | |
| P(MV)R5 | | | | | | | | | | | | | | | | | | | 0.25 | 1033.18 | 0.00 | 1.35 | 0.86 | |
| P(MV)R6 | | | | | | | | | | | | | | | | | | | 0.25 | 1029.89 | 0.00 | 1.38 | 5.48 | |
| P(MV)R7 | | | | | | | | | | | | | | | | | | | 0.25 | 1027.94 | 0.00 | 1.37 | 6.60 | |
| P(MV)R8 | | | | | | | | | | | | | | | | | | | 0.25 | 1026.55 | 0.00 | 1.36 | 10.12 | |
| P(MV)R9 | | | | | | | | | | | | | | | | | | | 0.25 | 1025.72 | 0.00 | 1.35 | 3.32 | |
| P(MV)R10 | | | | | | | | | | | | | | | | | | | 0.25 | 1024.15 | 0.00 | 1.44 | 4.94 | |
| P(MV)R11 | | | | | | | | | | | | | | | | | | | 0.25 | 1023.02 | 0.00 | 1.47 | 9.13 | |
| P(MV)R12 | | | | | | | | | | | | | | | | | | | 0.25 | 1022.83 | 0.00 | 1.46 | 12.16 | |
| P(MV)R13 | | | | | | | | | | | | | | | | | | | 0.25 | 1027.00 | 182.08 | 6.62 | 18.90 | |
| P(MV)R14 | | | | | | | | | | | | | | | | | | | 0.25 | 1022.29 | 0.00 | 1.46 | 12.24 | |
| P(MV)R15 | | | | | | | | | | | | | | | | | | | 0.25 | 1022.07 | 0.00 | 1.46 | 2.62 | |
| P(MV)R16 | | | | | | | | | | | | | | | | | | | 0.25 | 1019.89 | 0.00 | 1.47 | 3.10 | |
| P(MV)R17 | | | | | | | | | | | | | | | | | | | 0.25 | 1018.01 | 0.00 | 1.48 | 5.38 | |
| P(MV)R18 | | | | | | | | | | | | | | | | | | | 0.25 | 1016.20 | 0.00 | 1.48 | 3.61 | |
| P(MV)R19 | | | | | | | | | | | | | | | | | | | 0.25 | 1013.98 | 0.00 | 1.49 | 2.91 | |
| P(MV)R20 | | | | | | | | | | | | | | | | | | | 0.25 | 1012.04 | 0.00 | 1.48 | 4.03 | |
| P(MV)R21 | | | | | | | | | | | | | | | | | | | 0.25 | 1009.77 | 0.00 | 1.46 | 2.13 | |
| P(MV)R22 | | | | | | | | | | | | | | | | | | | 0.25 | 1007.30 | 0.00 | 1.48 | 5.91 | |
| P(MV)R23 | | | | | | | | | | | | | | | | | | | 0.25 | 1006.24 | 0.00 | 1.48 | 3.51 | |
| P(MV)R24 | | | | | | | | | | | | | | | | | | | 0.25 | 1003.89 | 0.00 | 1.46 | 3.14 | |
| P(MV)R25 | | | | | | | | | | | | | | | | | | | 0.25 | 1001.22 | 0.00 | 1.47 | 4.81 | |
| P(MV)R26 | | | | | | | | | | | | | | | | | | | 0.25 | 999.40 | 0.00 | 1.49 | 6.93 | |
| P(MV)R27 | | | | | | | | | | | | | | | | | | | 0.25 | 998.49 | 0.00 | 1.47 | 5.41 | |
| P(MV)R28 | | | | | | | | | | | | | | | | | | | 0.25 | 997.06 | 0.00 | 1.48 | 5.22 | |
| P(MV)R29 | | | | | | | | | | | | | | | | | | | 0.25 | 995.65 | 0.00 | 1.48 | 10.11 | |
| P(MV)R30 | | | | | | | | | | | | | | | | | | | 0.25 | 995.19 | 0.00 | 1.47 | 11.23 | |
| P(MV)R42 | | | | | | | | | | | | | | | | | | | 0.25 | 994.05 | 0.00 | 1.47 | 10.34 | |
| P(MV)R32 | | | | | | | | | | | | | | | | | | | 0.25 | 992.75 | 0.00 | 1.49 | 9.86 | |
| P(MV)R33 | | | | | | | | | | | | | | | | | | | 0.25 | 992.16 | 0.00 | 1.47 | 12.59 | |
| P(MV)R34 | | | | | | | | | | | | | | | | | | | 0.25 | 990.53 | 0.00 | 2.53 | 9.44 | |
| P(MV)R35 | | | | | | | | | | | | | | | | | | | 0.30 | 990.38 | 0.00 | 2.55 | 12.40 | |
| P(MV)R36 | | | | | | | | | | | | | | | | | | | 0.30 | 993.50 | 152.19 | 6.54 | 16.80 | |
| P(MV)R37 | | | | | | | | | | | | | | | | | | | 0.30 | 989.92 | 0.00 | 2.54 | 16.11 | |

NOTAS:

1. Todas las dimensiones no especificadas están dadas en metros.
2. El valor mínimo de LPD y LPI será para tubería de gres y de la tangencia (T) no inferior a 0.60 para tubería de concreto.
3. Para tubería de concreto de radio de curvatura R tendrá una dimensión mínima igual a 6 veces Ø e.
4. El corte A-A corresponde a una diferencia entre la cota de entrada (Ce) y la cota de salida Cs) inferior a 0.30; el corte B-B a una diferencia superior a 0.80; el corte C-C a una diferencia entre 0.30 y 0.80.
5. Las cotas de entrada y salida (Ce y Cs) corresponden a la proyección de la pendiente de los colectores de entrada y salida, respectivamente en el eje del pozo. Las consideraciones especificadas en los cortes B-B y C-C, son aplicables al corte principal A-A.
6. El concreto tendrá una resistencia a los 28 días de f'c= 3000 psi.
7. Las excavaciones deben ajustarse estrictamente a las necesidades de colocación del concreto, y sus dimensiones deberán ser aprobadas por el Interventor antes de su ejecución.
8. Cualquier cambio de dimensiones debe ser aprobado por el Interventor.
9. La tubería embebida en el concreto debe limpiarse cuidadosamente antes de colocar el concreto.
10. La tubería sanitaria de PVC deberá cumplir con la norma ICONTEC-382 y se instalará en los pozos indicados en el cuadro de dimensiones.
11. Se deberá construir el cilindro del pozo en concreto reforzado, para los pozos que presentan diferencias entre cotas de rasante y de fondo superiores a 6.00m.
12. El concreto reforzado se llevará hasta 2.00 m por debajo de la cota de rasante. El recubrimiento mínimo de refuerzo será 4 cm.
13. Acero de refuerzo $fy$=2.394 Kg/cm² para Ø ≤3/8" y $fy$= 4.200 Kg/cm² para Ø≥1/2".
14. El valor de $t$ será=0.20 para tubería de gres y 0.30 para tuberías de concreto.
15. L mt=0, para tubería de gres y de PVC L mt=1 para tubería de concreto (Ø≥24")

EMPRESA PUBLICA DE ALCANTARILLADO DE SANTANDER S.A. E.S.P.

DISEÑO Y CALCULO
Ing. GERMAN MARTINEZ GOMEZ
Mat.68202-172431

REVISO
Ing. LUDWING URIBE GARCIA
Mat. 68202-29990 Stder

LEV. TOP. : Top. Carlos Anteliz
DIGITALIZO : j.l.s.
FECHA : Abril del 2013
ESCALA : SIN ESCALA

APROBADO
Ing. MIGUEL MAURICIO SARMIENTO DURAN
Mat. 60202-142530 Stder

| REVISIONES | | |
|---|---|---|
| REFERENCIA | FECHA | RESPONS. |
| | | |
| | | |

**INTERCEPTOR SANITARIO**
**MENSULI ARANZOQUE**
**IV ETAPA**
Municipio de Floridablanca

**ALCANTARILLADO SANITARIO**
**INTERCEPTOR**
**POZO DE INSPECCION**
**ESTRUCTURA EN CONCRETO**

**SON 69 PLANOS**
**PLANO No. 49**
49-50_Est-poINTER
65-66manza.dwg